ISSN 2395-1621

Ergonomics Improvement of Foot Control of Tata Commercial Vehicle

#1Ankit Jain

1a.ankit00@gmail.com

#1Mechanical Engineering, SavitribaiPhule Pune university Pune.(M.H)

ABSTRACT

Driver comfort is always an important design aspect of a passenger vehicle, but in today's scenario of Increasing Competition among automobile makers, even in commercial vehicle also a significant attention is being given to this area. Driver's comfort while driving is influenced by the sitting posture and location of various instruments which are to be operated by driver manually. One of such frequently operated instruments is vehicle's foot control. In a vehicle generally three types of foot controls are there, for clutch, for brake and for accelerator .Sometimes these are also called as A, B, C control. The Position A, B, C controls has a great effect on the driver's comfort as due to heavy front axle load, the pedal effort to operate these controls is higher than that of passenger cars, also due to long driving the frequency of application of these pedal is also high. Due to this, driver of the vehicle started feeling uncomfortable and its fatigue increases.

In this paper i am going to discuss the effect of foot controls position on the driver's fatigue. I will also discuss the relation between driver's joint angles, and foot control position. Discussion will also include the method to find out correct location of foot controls as per the principles of ergonomics. The second part of this paper deals with the application of above study on a Tata commercial vehicle (SFC407 and LPT407). We will be discussing about our study of the current position of Foot Control pedal in these vehicle and whether they are correct as per principal of ergonomics or not.

We will also present our design of foot controls for one of the above vehicle which will be ergonomically correct as per our study. to validate our design we have used the software called RAMSIS, which gives us the comfort or discomfort rating of the driver on a scale of 1 to 10 with 1 being excellent and 10 worst.

After successfully design of the control pedal which gives us a discomfort rating of less than 3 we will physically validate our result on the vehicle itself. For this Tata Motors Outdoor Testing Dept. (ODT) will help us in evaluating the performance of our design by subjective as well as objective testing.

As this is a sponsored project from Tata Motors ltd. Some of the critical results which are confidential to the company would not be presented here.

ARTICLE INFO

Article History

Received :18th November 2015

Received in revised form :

19th November 2015

Accepted : 21st November , 2015

Published online :

22nd November 2015

Keywords— **Foot Contorl, Tata SFC407,Tata LPT407,ODT (Tata Motors Outdoor Testing Dept), Ramsis.**

I. INTRODUCTION

Pedals are one of the most important controls used in vehicles. Compared to hand controls, foot controls often restrict the posture of the user, and an inappropriate pedal design may contribute to muscle fatigue and cause discomfort for drivers[2] .In a commercial vehicle the long trips a quite usual where driver has to drive the vehicle continues for long hours. During this there are repetitive operation of foot controls happens. if not positioned correctly as per principal of ergonomics, there operation will contribute to the drivers fatigue in a great manner during long journey and complaint will arise from the

© 2015, IERJ All Rights Reserved

Customers.In one such a case there are few complaints from the customers related to Tata LPT407 and SFC407 vehicles where they feel that the pedal operation (specially clutch and brake pedal) is difficult and very exhausting during long journey.

If we capture this customers voice into technical term than he mean to say that foot controls are ergonomically not correct.

This gave us the opportunity to study the current design of foot control available on the vehicle and to propose a alternative design which can resolve this issue

II. METHODOLOGY ADOPTED

As our objective is to design the ergonomically corrected foot control pedal, hence we have first studied the present design and then the necessarymodification proposed. Thus methodology adopted in this study can be divided into three phases. In **"Phase I"** which is "**theoretical analysis"**,we have first studied the basis requirement of ergonomics for truck drivers control. Than we checked weather the design of present foot control of LPT 407 commercial vehicle is correct as per our study or not. Than we have proposed a new design of foot control. After this we have evaluated the theoretical discomfort rating of our new design.

In **"Phase II"**, which is "**Simulation or software analysis"**of present design and proposed design,is done by using the software named "**RAMSIS"**. It gives the discomfort rating of foot control by using the 95th percentile Indianmanikin. With this we have compared the discomfort rating of existing and proposed design.

At last, in **"phase III"**which is **"subjective analysis"** the proposed foot control will be fabricated and installed on the vehicle. A jury team will be formed within the tata motors who will evaluate the present design and proposed design subjectively and will give the discomfort rating to both.

A.THEORETICAL ANALYSIS

As per the study done by Mr. Xuguang Wang on biomechanical evaluation of the comfort. A possible correlation between biomechanical factors and comfort rating can be established. [1]. In his experiment, Comfort was evaluated using a general comfort rating scale. The relationshipbetween comfort rating and biomechanical parameters was explored.

The four independent variables studied in Mr. Wang's work (Fig. 1) were: seat height defined as H-point height of the SAE H-point manikin, pedal travel defined as the range of pedal movement,travel inclination with respect to the horizontal and pedal resistance characterized by the minimum force to maintain the pedal fully depressed.

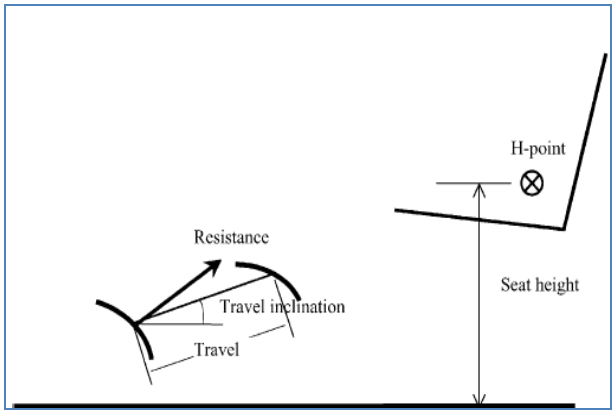

(Fig.1 Independent Parameters of Foot control)

The main results from the analysis of the effects of these Parameters are summarized as follows:

1.Small pedal travel and low pedal resistance were preferred. Comfort decreased almost linearly with these two factors.

2. Seat height had a strong influence. Its effect is quadratic with the maximum comfort rating around a height of 250mm for the short females and 300mm for the male groups.

3. It was found that travel angle had small but significant effect on comfort judgment. A smaller travel angle was preferred for short females than for males.

4.None of the interactions of these four parameters was found significant.

From the above work we came to know that pedal height w.r.t to driver H point and pedal travel has strong influence on comfort rating.

From the guidelines given in the SAE J898 [3] the location of the control pedals should lie in the area circumscribed by the coordinates given in the below table.

	coordinates for		
Point	X	Y	Z
H	581	-275	-470
I	820	-275	-150
J	932	-275	-150
K	687	-275	-470

Table 1. coordinates for zone of comfort. Foot control Location zone

In pictorial view the zone of comfort looks like fig.2. here the coordinates are taken from the seat inclination point which is nothing but the line passed through the driver H point.

As per the guideline given in SAE J898 for packaging of foot control, the complete pedal travel and should lie within the comfort zone.

© 2015, IERJ All Rights Reserved

	Subject	Required	Recommended	Remarks
1	position of seat (H-point according to ISO 6549)		X = 650 Y = 0 Z = 510	a
2	adjustment range horizontal	⩾ 200	⩾ 230	⩾ 100 fore and aft
3	adjustment range vertical	⩾ 100	⩾ 130	⩾ 50 up and down
4	depth of seat area	400 – 450	390 – 500 adjustable	
5	width of seat area (total)	⩾ 450	⩾ 480	
6	inclination of seat area	5° ± 5°	5° ± 10° adjustable	b
7	height of seat back	⩾ 500	⩾ 600	
8	seat back width (total)	⩾ 475	—	
9	seat back width (lumbar region)	⩾ 270	300 – 340	
10	inclination range of back-rest (to vertical)	+10° to +25° adjustable	0 to 30° adjustable	
11	height of head-restraint's top edge (above seat squab)	⩾ 840	—	c
12	height of head restraint	⩾ 120	—	c
13	width of head restraint	⩾ 250	—	c
14	weight adjustment for damping of the seat		45 – 130 kg	

a For the purpose of this part of ISO 16121, which is to provide equally good ergonomics for tall and small drivers, the H-point shall be regarded in a medium position with respect to its longitudinal position. Medium position means the middle of the fore/aft and vertical adjustment range.

b Positive angle = front of seat cushion upward.

c If head restraint is provided.

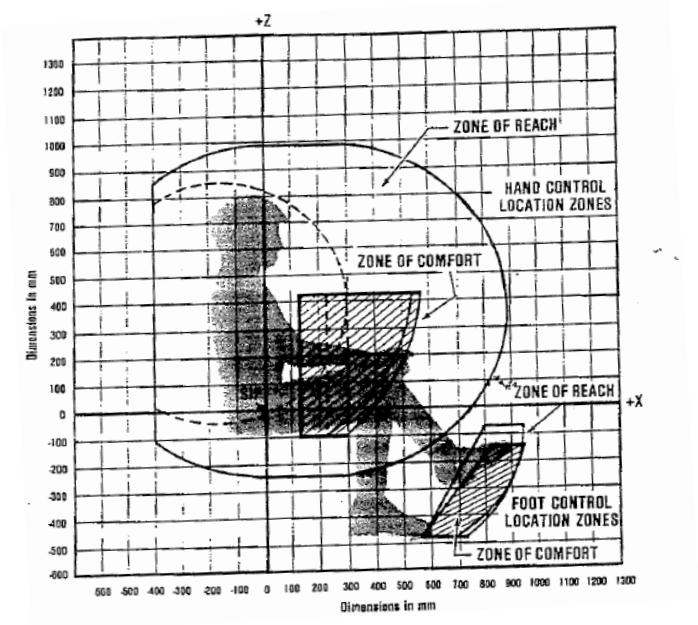

(Fig.2 comfort zone location w.r.t seat index point SIP)

(Table 2. ISO -16121 Basic ergonomic requirement of Driver work Place.)

The above shown table shows the recommended values of various parameters related to drivers work space as per ISO-16121.

We have applied the above study in finding out the correctness of present design.

For that firstly we have physically verified the position of different vehicle for benchmarking.
Following vehicles were taken into consideration.
LPT407 truck, SFC407 truck, Eicher 10.59 truck and Tata Y1 truck.

Firstly we have evaluated the position of brake and clutch pedal in X and Y direction. Which comes as per below given table.

VEHICLE	BRAKE		CLUTCH	
	A	B	A	B
LPT-407	677	233	675	231
Tata Y1	788	275	788	278
SFC-407	818	145	773	140

(Table. 3 Position of Pressure Point)

Below shown in the 95th percentile manikin which was used to find out the pedals position.

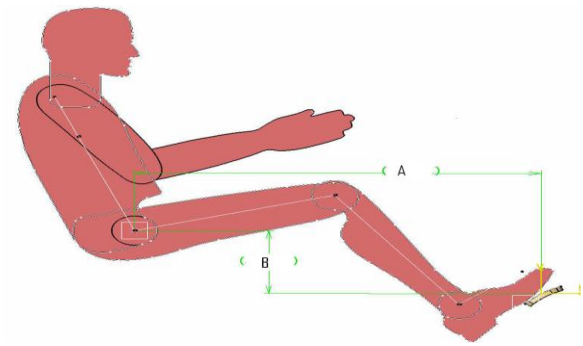

Fig.3 Plot of A and B dimension with 95th Percentile manikin.

© 2015, IERJ All Rights Reserved

As per our benchmarking analysis we have find out that the pedal location of Tata Y1 truck (which is having most comfortable foot control location as per customer feedback) is further away in X direction by 111 mm w.r.t LPT407 and down by 42 mm in Y direction.

This gave us the vital information that pedal far away and down from the drivers H point have high comfortable rating.

This comment has to be verify by comfort zone giving in the SAE J898.

For this we have created this comfort zone by using CAD software Pro-e. Than we have analysed where the Position of Pressure Point is coming for all the three vehicles.

This study is shown in the fig.4 below.Where the position of pressure point for LPT407 is shown by Pink manikin, for tata Y1 it is shown by Blue manikin and for SFC407 it is shown by green line.

From this we come to know that Tata Y1 has lowest Pressure Point within the comfort zone w.r.t other two vehicle. Thus pressure point have great effect of comfort rating.

Later we have mapped the location of pressure point for LPT407 vehicle and found out that it is coming outside the zone of comfort, which is contributing factor for the discomfort.

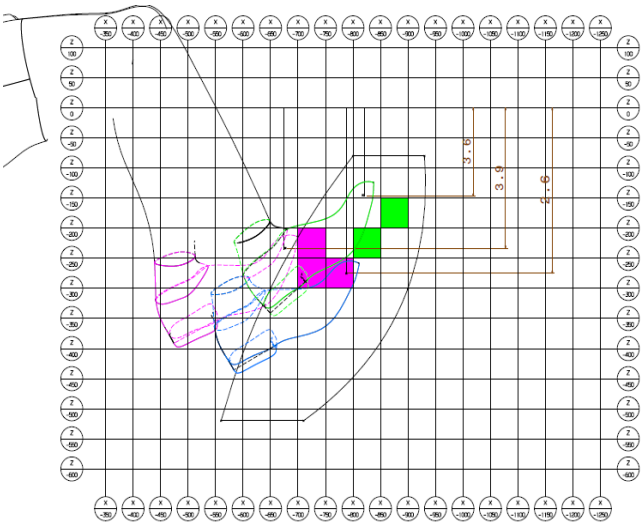

(Fig.4 plot of pressure point in comfort zone)

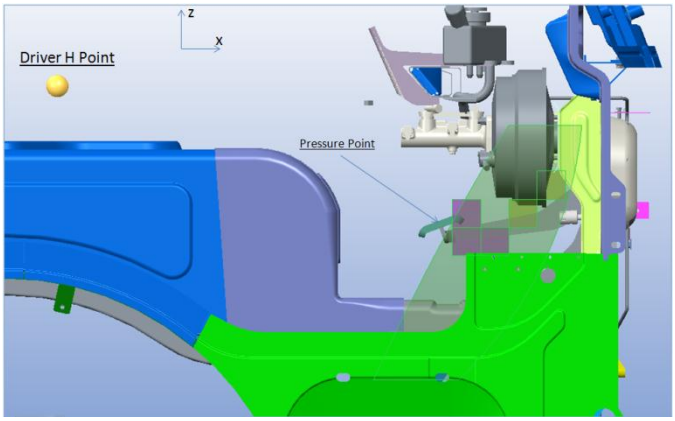

(Fig.5 Mapping of LPT407 pressure point in CAD existing design).

Once we have found out that LPT407 trucks control pedal does't lie in the drivers comfort zone, our task become easy as we have to just modify the design of existing pedal to make it lie within the comfort rating.

With this objective in our mind we have changed the design of the existing pedal. the new design is as shown in the fig 6. below.

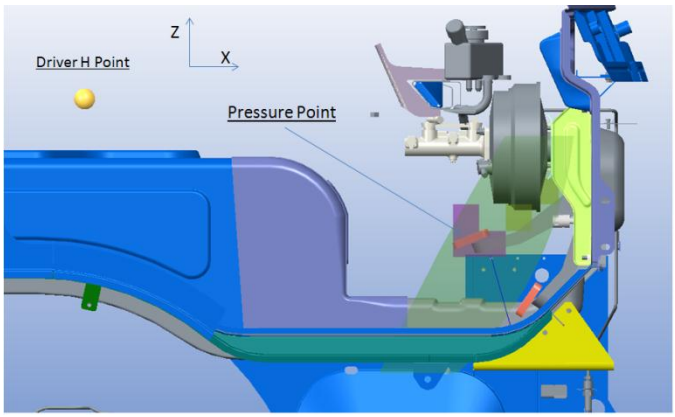

(Fig.6 New location of Pressure Point with modified design)

Modified and existing drawing of clutch and Brake pedals for LPT407 vehicle are shown on the subsequent pages.as shown in the fig 6 the new position of pressure point lies inside the comfort zone hence this design will be more comfortable than earlier one. We will validate this design in our new section by using the software called **RAMSIS.**

B. SIMULATION OR SOFTWARE ANALYSIS.

In this section we have validated the current design and proposed design in ergonomics simulation software RAMSIS.

RAMSIS has a wide spectrum of anthropometric data of the most important global regions, for example Asia, North America and Europe.it uses the different manikin size as per the target population of the different regions globally. It evaluate the correctness of the design of different components in drivers reach and gives the ratings of discomfortness on a scale of 1 to 10 with 10 being the most discomfort able and 1 being the most comfortable.

By using this software we have evaluated the discomfort ratings ofvarious with the present design and then with the modified design.

Software results are shown below. Results clearly indicates that's by changing the design of pedal profile.

Brake Pedal.				
	Existing Design		New Design	
	Un-pressed.	Pressed.	Un-pressed.	Pressed.
Fatique	**3**	**2.4**	**2.6**	**2.4**
Discomfort feeling	**3.9**	**3**	**3.2**	**3.1**

© 2015, IERJ All Rights Reserved

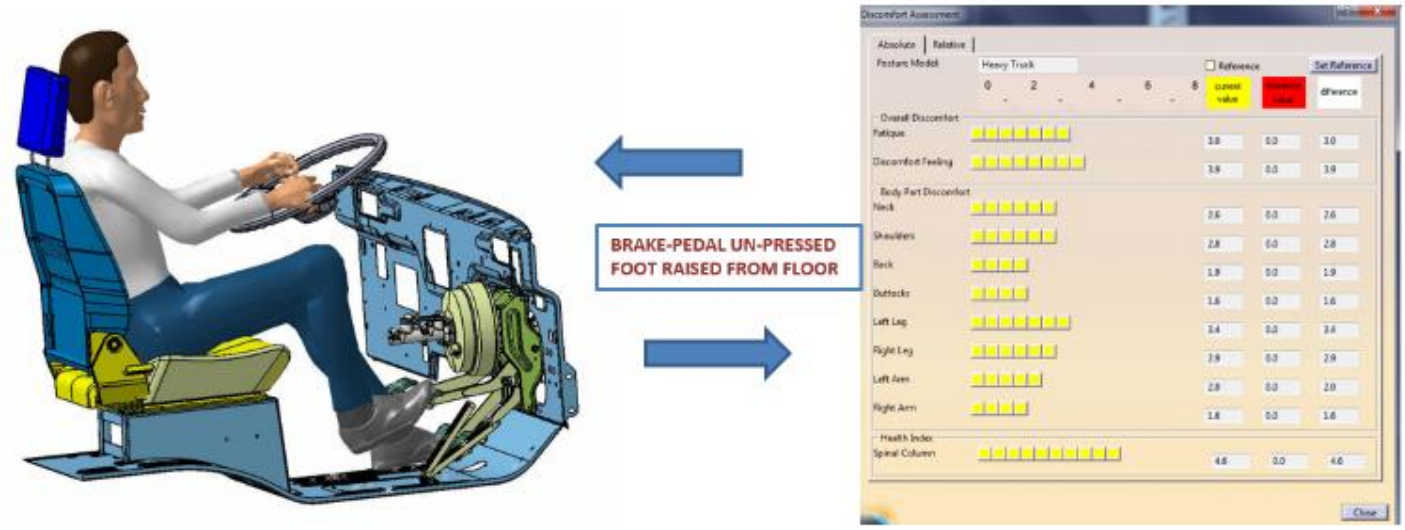

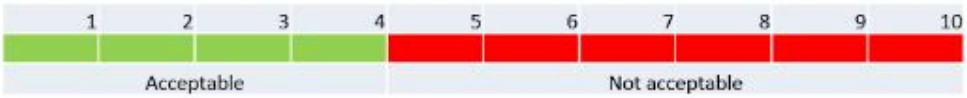

Neck	2.6	2.3	2.3	2.2
Shoulders	2.8	2.1	2	1.9
Back	1.9	1.3	1.6	1.4
Buttoks	1.6	1	1.2	1.1
Left leg	3.4	2.4	2.6	1.7
left arm.	2.9	1.6	2.2	2
Right Arm.	1.6	1.6	1.7	1.9

(Table 4. Discomfort Rating of Brake Pedal for LPT407)

Clutch Pedal				
	Existing Design		New Design	
	Un-pressed.	Pressed.	Un-pressed.	Pressed.
Fatique	3	2.6	2.6	2.7
Discomfort feeling	3.9	3.2	3.2	3.4
Neck	2.6	2.3	2.3	2.2
Shoulders	2.8	2.8	2.2	2.6
Back	1.9	1.8	1.8	2.1
Buttoks	1.6	0.8	0.8	1.1
Left leg	3.4	2.1	5.4	2.2
left arm.	2.9	1.7	1.7	1.8
Right Arm.	1.6	1.7	2.6	1.9

(Table 5. Discomfort Rating of Clutch Pedal for LPT407)

© 2015, IERJ All Rights Reserved

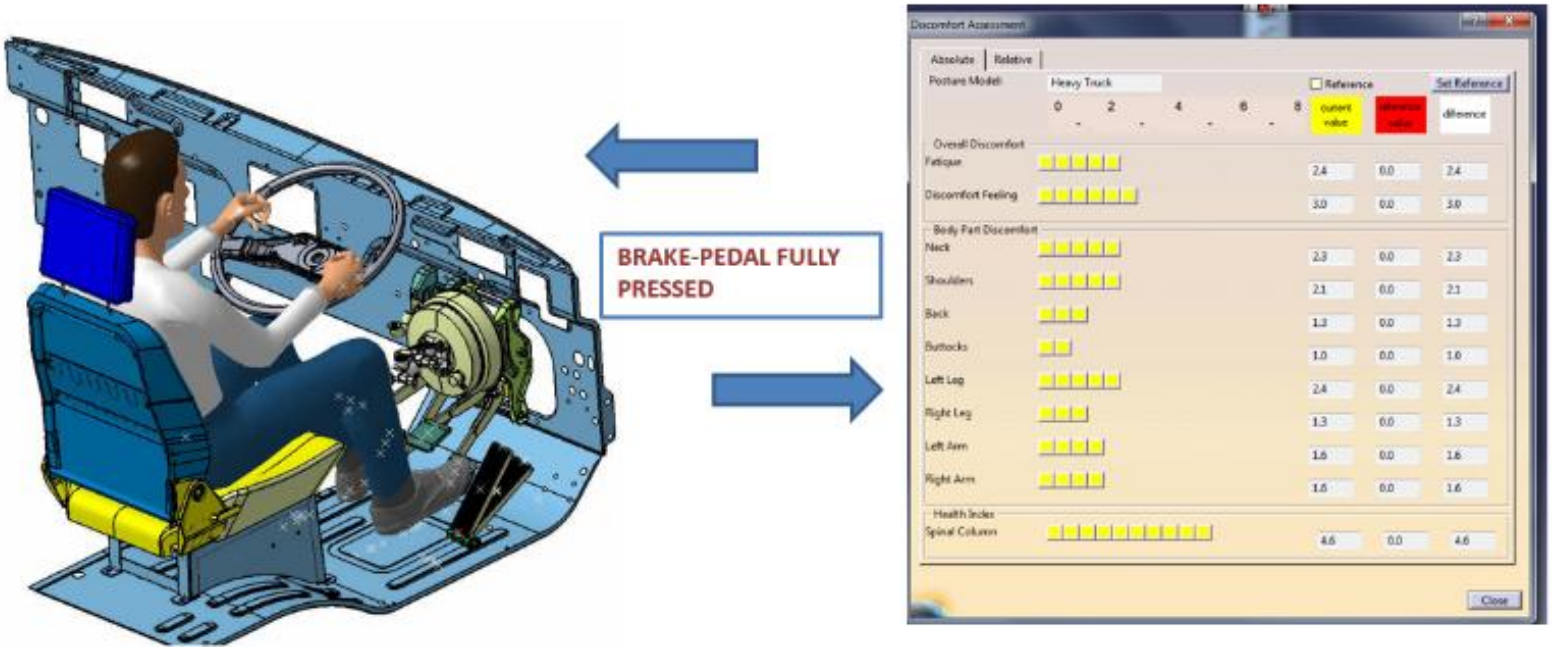

(Fig.7 Existing Brake Pedal In Un-Pressed condition)

(Fig 8, New Brake Pedal in Un-pressed condition)

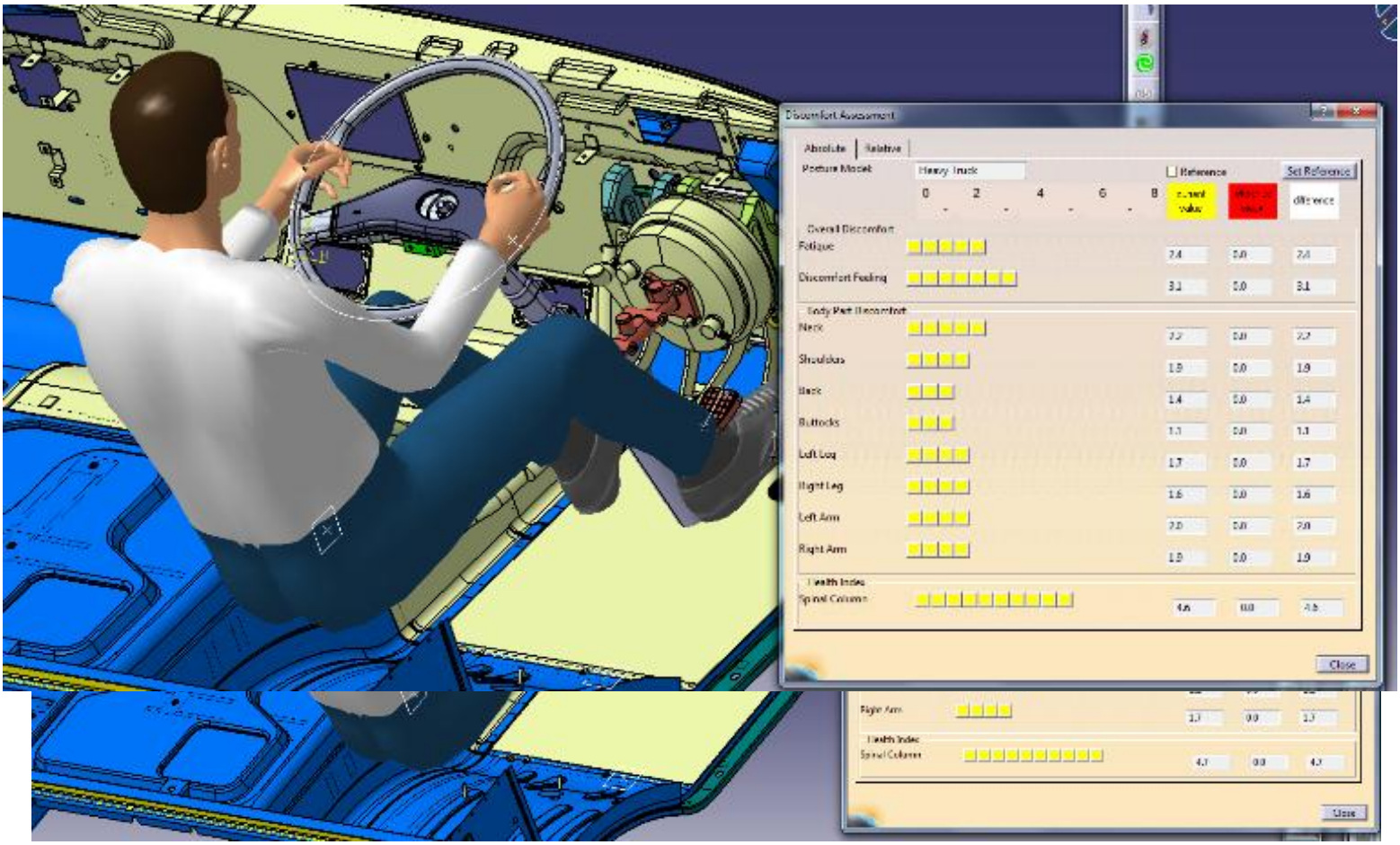

(Fig.9 existing Brake Pedal In fully Pressed condition.)

© 2015, IERJ All Rights Reserved

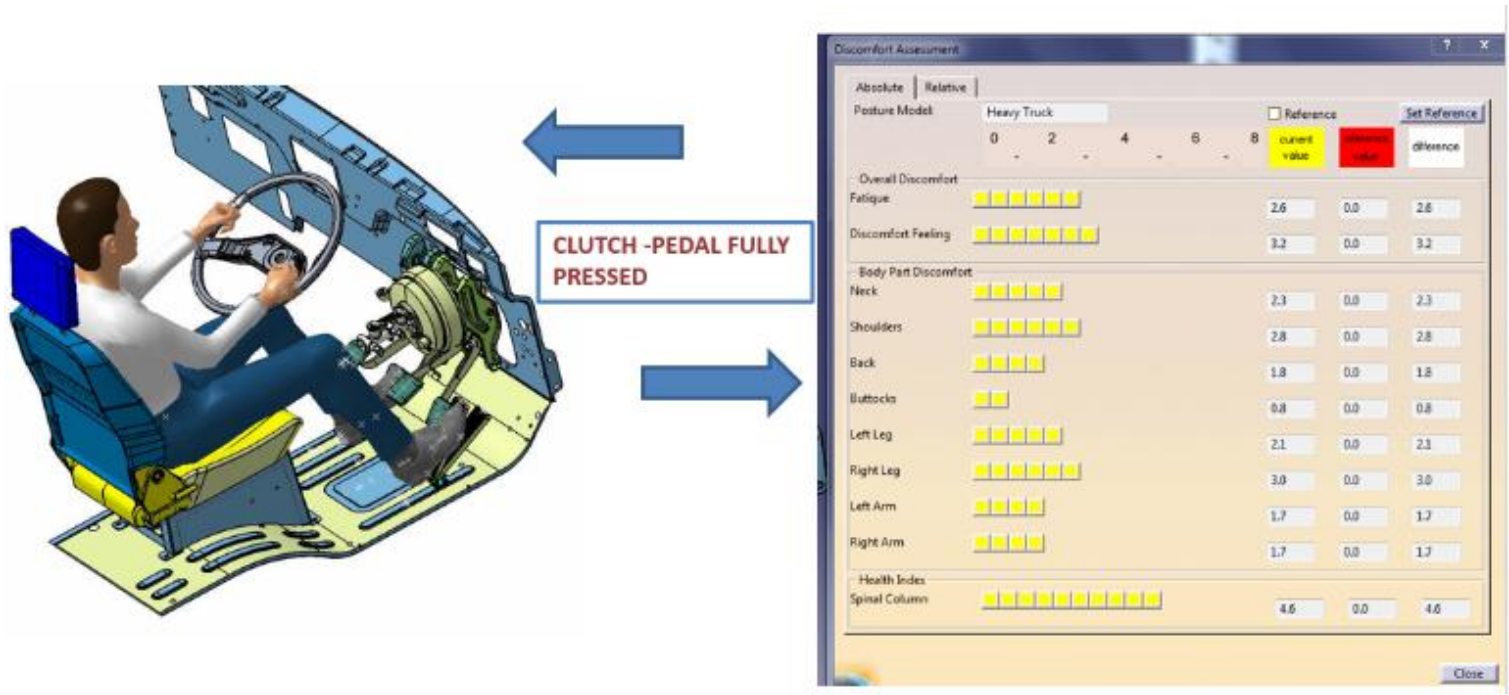

(Fig. 10 Modified Brake Pedal in Fully Pressed condition)

(Fig.10 Existing Clutch pedal in Fully Pressed condition)

© 2015, IERJ All Rights Reserved

(Fig.11 New Clutch Pedal in fully Pressed condition)

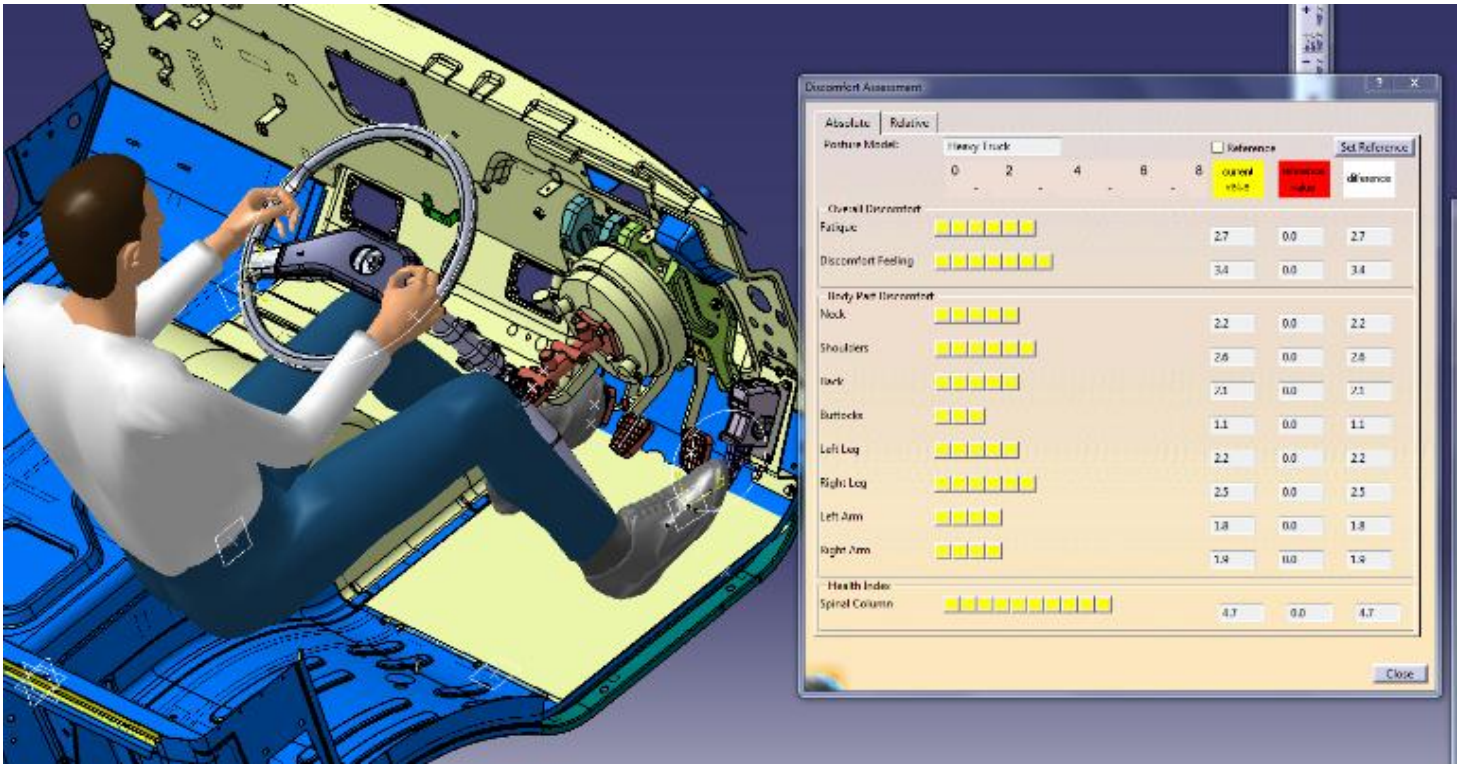

C. SUBJECTIVE ANALYSIS

After theoretical and Software analysis of our new design finally we have proposed it for subjective analysis on vehicle itself. Till the time of writing this paper the physical components has been manufactured in Tata Motors fabrication shop. Below shown is the figure of new fabricated brackets. As a way forward a these new foot controls are to be installed on the vehicle and jury trails are to be taken by the jury team which consist of experienced person from testing dept, service dept. production dept and from design team. There feedback will be recorded w.r.t comfort with the existing design.

(Fig 12, Newly Designed Clutch Pedal.)

© 2015, IERJ All Rights Reserved

(Fig 13, Newly Designed Brake Pedal.)

III.CONCLUSION

As per our study relation was found between the location of pressure point on brake and clutch pedal with the comfort rating. The location of pressure point in existing design was outside the comfort zone hence its discomfort rating was high. With the improved design we brought the pressure point with the comfort zone of foot control. As per the results from the RAMSIS software we have found out that discomfort rating has got improved with the New design. Hence the theoretical prediction are very well complied by the software analysis. Last remaining part of our study, which is subjective analysis of new design by jury team is pending. We are hopeful that jury tam will find the new foot control design comfortable w.r.t existing design.

ACKNOWLEDGMENT

I am thankful to Prof .Amit Umbrajkar for his guidance.It is proud privilege to work under his guidance .I am also thankful to Mr. Rajanikanth Reddy (Sr.Manager, Tata Motors) for his invaluable support in this project work.

REFERENCES

[1] Xuguang Wang*, Blandine Le Breton-Gadegbeku, Lionel BouzonBiomechanical evaluation of the comfort of automobile
clutch pedal operation.International Journal of Industrial Ergonomics 34 (2004) 209–221

[2] Jeong Hoon Lee, Bo Kyung Kwon and Sung Chul Choi.
The Optimal Design of Foot Rest Simulated with CATIA V5 Human
2009 SAE International-2009-01-2278

[3] CheeFai Tan*, Wei Chen, Frank Delbressine and Matthias Rauterberg.
objectifying discomfort seat measurement fornext generation truck driver’s seat

[4] Michiel P. De Loozea; Lottie F. M. Kuijt-Eversa; Jaap Van Dieënb
Sitting comfort and discomfort and the relationships with objective
Measures.
TNO Work and Employment P.O. Box 718 2130 AS HoofddorpThe Netherlands, b Faculty of Human Movement Sciences, VrijeUniversiteit Amsterdam The Netherlands,

[5] SAE- J1516 OCT2011. Accommodation Tool Reference Point for Class B Vehicles

[6] ISO-16121- Ergonomicrequirements for the driver's workplace in
Line-service buses.

[7] SAE standard – J898-Control Locations for Off-Road Work Machines.

[8] AIS- 035- The arrangement of foot control for automotive vehicles.

[9] Paul A. Green - human factors and ergonomics in motor vehicle transportation.

[10] KianoushFatollahzadeh – A doctoral thesis on
A mathematical model approach with respect to anthropometry,
body landmark locations and discomfort.
Stockholm 2006 .Royal Institute of Technology.

[11] NIKOLAOS GKIKAS.- Automotive ergonomics. Driver vehicle interection..

© 2015, IERJ All Rights Reserved